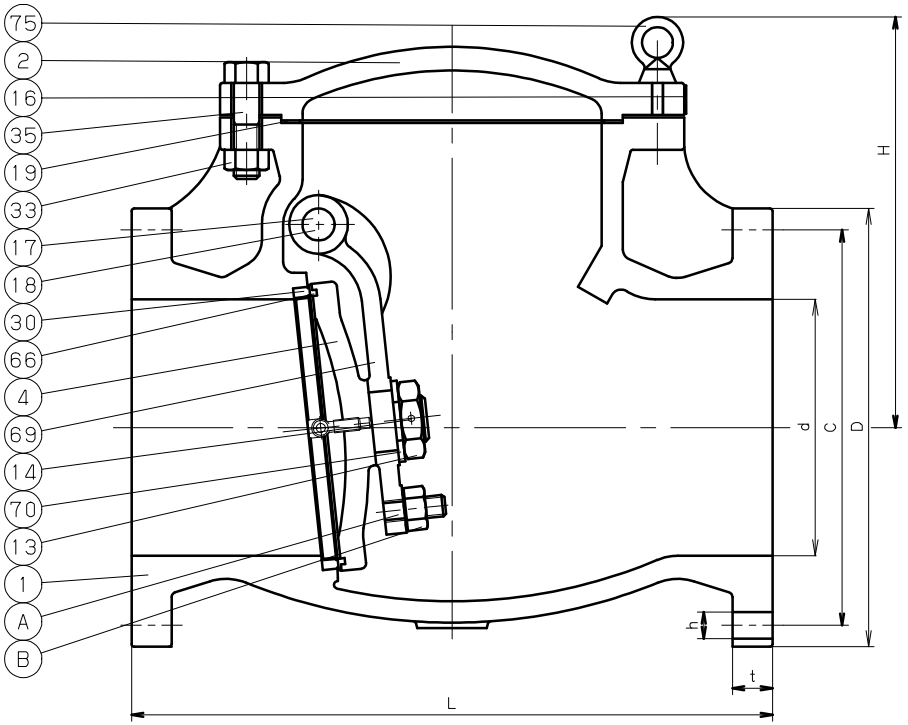

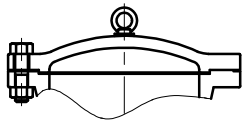

SIZE 6, 8

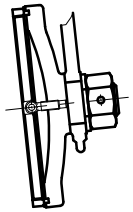

UP TO SIZE 8

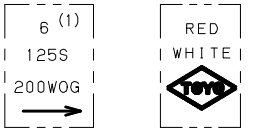

ONE SIDE THE OTHER SIDE

MARKING ON THE BODY

NO	NAME OF PARTS	QTY	MATERIALS	SPECIFICATIONS
				ASTM SPEC.
1	BODY	1	CAST IRON	A126 CL. B
2	COVER	1	CAST IRON	A126 CL. B
4	DISC	1	CAST IRON	A126 CL. B
13	DISC NUT	1	CARBON STEEL	A307 NOTE 2
14	PIN	1	STAINLESS STEEL	
16	NAME PLATE	1	ALUMINUM	
17	HINGE PIN	1	STAINLESS STEEL/BRASS	
18	PLUG	1	MALLEABLE CAST IRON	KTH300-06
19	GASKET	1	NON ASBESTOS SHEET	
30	BODY SEAT RING	1	CAST BRONZE	B62
33	COVER NUT	1S	CARBON STEEL	NOTE 2
35	COVER BOLT	1S	CARBON STEEL	NOTE 2
66	DISC SEAT RING	1	CAST BRONZE	B62
69	ARM	1	CAST STEEL	A216 Gr. WCB
70	WASHER	1	CARBON STEEL	A307 NOTE 2
75	EYE BOLT	1	CARBON STEEL	NOTE 2
A	BOLT	1S	CARBON STEEL	NOTE 2
B	NUT	1S	CARBON STEEL	NOTE 2
			1S=1 SET	

DIMENSIONS UNIT:mm

NOMINAL SIZE					END FLANGE							
					(3)	BOLT HOLE			BOLT	(3)		
in.	mm	d	H	L	D	C	NO.	h	SIZE	t		
2	50	51	153	203	152	120	4	19	M16	15.9		
2.1/2	65	64	162	216	178	140	4	19	M16	17.5		
3	80	76	176	241	190	150	8	19	M16	19.1		
4	100	102	220	292	229	175	8	19	M16	23.9		
5	125	127	226	330	254	210	8	23	M20	23.9		
6	150	152	307	356	279	240	8	23	M20	25.4		
8	200	203	325	495	343	290	12	23	M20	28.6		
10	250	254	384	622	406	355	12	25	M22	30.2		
12	300	305	426	698	483	400	16	25	M22	31.8		

NOTE (1) VALVE SIZE(inch) IDENTIFICATION. (3) "D" & "t" SHALL BE IN ACCORDANCE WITH ASME B16.1 JIS10KFF.
(2) ZINC PLATED

STANDARD		
	FACE TO FACE OR END TO END	ASME B16.10 JIS10KFF
	END CONNECTION	JIS B2239 10KFF
	WALL THICKNESS	MAKER STANDARD
	PRESSURE TEST	MAKER STANDARD
PRODUCT CODE		430E
FIGURE		YA125-FNSF F10KFF

10K CAST IRON
SWING CHECK VALVES

BOLTED COVER, FLANGED ENDS.

DATE APPD	AUG.13' 15	DRAWING NO	△		
APPD BY	K. NAKAI	833-001914	△		
CHKD BY	K. NAKAMURA		△		
DSGND BY	Y. YAMASHITA		△		
DRAWD BY	H. YUDASAKA	REV-01	MARK	DATE	BY

TOYO VALVE CO., LTD.

TOYO